NGK Metals Corporation
917 U.S. Highway 11 South Sweetwater, TN 37874 800 523-8268 Fax 877 645-2328

Machining Beryllium Copper

Overview

NGK Metals produces several alloys of beryllium copper to meet the specific customer needs. The properties of the different alloys are dependent on the amount of cold work and type of heat treatment. The age hardenable tempers must be heat treated after forming or machining operations by the user.

A volume change is expected when the high strength beryllium copper alloys are heat treated. These alloys shrink approximately 0.5 vol. %. Rough machining can be done before heat treating. Final machining should follow heat treatment if precise dimensional tolerances are needed. When using the high conductivity beryllium copper alloys there is no volume change during the heat treatment. These alloys, which have moderate hardness levels, are usually purchased in aged tempers and are readily machinable.

Wrought products are available in 4 tempers: annealed (A), hard (H), annealed and heat treated (AT), and hard and heat treated (HT). Cast products are available in 4 tempers: as cast (C), as cast and heat treated (CT), as cast and annealed (A), and as cast, annealed, and heat treated (AT). Special tempers are also available upon request.

Tooling Materials and Coolants

Beryllium copper is machined with high speed steel or carbide tools. When using high speed steel tools the following types are recommended M1, M2, T1, or T2. General purpose carbide grade C-2 is recommended when using carbide tools. If precise dimensional tolerances or long production runs are needed, carbide tools have the greatest advantage. If short production runs or the total amount of material being removed is small, high speed steel tools are adequate. Under normal conditions the tool life end point has a wear land of 0.060 inch for high speed steel tools and 0.015 to 0.030 inch for carbide tools. At moderate cutting speeds and feeds up to 0.020 inch/rev., the tool life increase greatly. If the speeds increase, tool life will reach a maximum. Once the speed reaches 0.01 - 0.15 inch/rev., the tool life will start to decrease. Coolant is highly recommended for quality, productivity, and safety on all machining operations. A constant even flow is essential to prevent thermal shock and resultant failure. The following are desirable coolants that are commonly used: water soluble oils, mineral lard oils, or chemical emulsions.

Drilling

When drilling beryllium copper, a cutting fluid should be used. The fluid acts as a coolant and lubricant, and aids in chip removal. If the drill point is allowed to rub or if the feed rate is too low, the beryllium copper will work harden and become more difficult to drill.

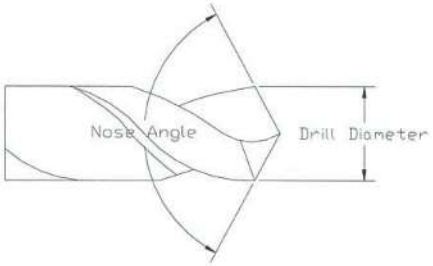

Material		Temper	Cutting Speed (ft/min)	Feed Rate (in/rev)
UNS Alloy No.	Berylco Alloy			
C17200 and C17300	25 and 33	A	200-375	0.002-0.009
		H	150-300	0.002-0.009
		AT, HT	100-300	0.002-0.009
C17500 and C17510	10 and 14	A, H	200-600	0.002-0.005
		AT, HT	125-500	0.002-0.005
C82800, C82600, C82500, C82510, C82400	275C, 245C, 20C, 21C, 165C	C, A	100-275	0.002-0.005
		CT, AT	75-100	0.002-0.005
C82200, C82000	14C, 10C	C, A	100-500	0.002-0.005
		CT, AT	50-200	0.002-0.005

- A Nose Angle of 118° is desired.
- Carbide should be used when drilling hard material.

Electrical Discharge Machining (EDM)

EDM is a high precision metal removal process that uses thermal energy to produce an electrical discharge to erode metal. EDM is commonly used in a variety of ways from drilling microscopic holes to machining large beryllium copper molds. The material being machined must be electrically conductive and a dielectric fluid must be present for all EDM operations. To produce acceptable results when machining beryllium copper, the amperage must be low and the voltage must be high. Negative polarity results in the highest metal removal process along with a rougher surface, while a positive polarity is used to produce a smoother surface.

Grinding-Centerless

A low grinding speed is critical to avoid work hardening the material. The recommended starting condition is to use a regulating wheel angle with a positive inclination of 3° and a regulating wheel speed of 25 to 40 rpm. The recommended method of grinding is with a wet surface. If dry grinding, a softer grade wheel must be used. For larger diameter, a softer and/or coarse grit wheel is recommended. For smaller diameter a harder grade wheel must be used.

Material					
UNS Alloy No.	Berylco Alloy	Temper	Rockwell Hardness	Wheel Speed (ft/min)	Thru-feed of Work (ft/min)
C17200 and C17300	25 and 33	A H	B20 - 100	5500 to 6500	50 - 150
C17500 and C17510	10 and 14	A, H AT, HT			
C82800, C82600, C82500, C82510, C82400	275C, 245C, 20C, 21C, 165C	C, A			
C82200 and C82000	14C and 10C	C, A CT, AT			
C17200 and C17300	25 and 33	AT, HT	C35-45	5500 - 6500	50 - 150
C82800, C82600, C82500, C82510, C82400	275C, 245C, 20C, 21C, 165C	CT, AT			

- The in-feed on diameter for a rough surface is 0.010 – 0.020 in/pass.
- The maximum in-feed on diameter for a finish surface is 0.002- 0.008 in/pass.

Grinding-Surface

A low grinding speed is critical to avoid work hardening the material. The recommended method of grinding is with a wet surface. If dry grinding, a softer grade wheel must be used. For larger diameter a softer and/or coarse grit wheel is recommended. For smaller diameter a harder grade wheel must be used.

Material					
UNS Alloy No.	Berylco Alloy	Temper	Rockwell Hardness	Wheel Speed (ft/min)	Work Speed (ft/min)
C17200 and C17300	25 and 33	A H	B20-100	5500 - 6500	70-100
C17500 and C17510	10 and 14	A, H AT, HT			
C82800, C82600, C82500, C82510, C82400	275C, 245C, 20C, 21C, 165C	C, A			
C82200 and C82000	14C and 10C	C, A CT, AT			
C17200 and C17300	25 and 33	AT, HT	C35-45	5500 - 6500	70 - 100
C82800, C82600, C82500, C82510, C82400	275C, 245C, 20C, 21C, 165C	CT, AT			

- The in-feed on diameter for a rough surface is 0.002 in/pass.
- The maximum in-feed on diameter for a finish surface is 0.0005 in/pass.

Reaming

Reaming is a hole sizing process and should be used when precise dimensional tolerances for holes or a good finish are required. Like other machining processes beryllium copper will become work hardened after the cutting edges of the reamer are in contact with the metal. This will make the material more difficult to cut. A feed rate below 0.010 in/rev will minimize the hardening effect for material in the annealed or hard temper. If AT or HT temper is used the feed rate can be below 0.002 in/rev because the material is already in the hardened state. A coolant should be used to extend the life of the reamer and to remove chips from the area.

Material				
UNS Alloy No.	Berylco Alloy	Temper	Speed (ft/min)	Feed (in/rev)
C17200 and C17300	25 and 33	A, H	100-300	0.002-0.010
		AT, HT	50-200	0.002-0.010
C17500 and C17510	10 and 14	A, H	200-600	0.002-0.010
		AT, HT	100-500	0.002-0.010
C82800, C82600, C82500, C82510, C82400	275C, 245C, 20C, 21C, 165C	C, A	100-300	0.002-0.010
		CT, AT	50-200	0.002-0.010
C82200, C82000	14C, 10C	C, A	200-600	0.002-0.010
		CT, AT	100-500	0.002-0.010

- When using reamers smaller than 3/16 in. diameter the feed and speed should be reduced.
- Carbide straight flute reamers are recommended.

Milling

The use of carbide milling cutters are recommended especially if the production runs are large and with precise dimensional tolerances. No cutting fluid is required to achieve satisfactory results, but it will help in the tool life, surface finish, and chip removal.

Material			Cutting Speed	Feed	Depth of Cut	End Mill Radial Angle	Surface Mill Radial Angle
UNS Alloy No.	Berylco Alloy	Temper	(ft/min)	(in/tooth)	(in)		
C17200 and C17300	25 and 33	A	200-275	0.001-0.003	0.060-0.200	10°	10°
		H	200-275	0.001-0.003	0.125-0.200	10°	10°
		AT,HT	125-200	0.001-0.003	0.060-0.125	10°	10°
C17500 and C17510	10 and 14	A	500-800	0.005-0.008	0.060-0.200	10°	10°
		H	600-800	0.006-0.010	0.125-0.200	10°	10°
		AT,HT	400-800	0.005-0.008	0.060-0.125	10°	10°
C82800, C82600, C82500, C82510, C82400	275C, 245C, 20C,21C, 165C	C,A	50-150	0.001-0.002	0.050-0.125	10°	10°
		CT,AT	20-50	0.001-0.002	0.050-0.125	10°	10°
C82200, C82000	14C, 10C	C,A	100-200	0.001-0.002	0.050-0.125	10°	10°
		CT,AT	75-150	0.001-0.002	0.050-0.125	10°	10°

- When using a milling cutter smaller than 3/16 in. diameter the feed and speed should be reduced.
- All speeds and feeds listed are for high speed steel tools. If using carbide milling cutters, the speed should be increased by 2 to 3 times. The feed rate/tooth ratio should not increase.

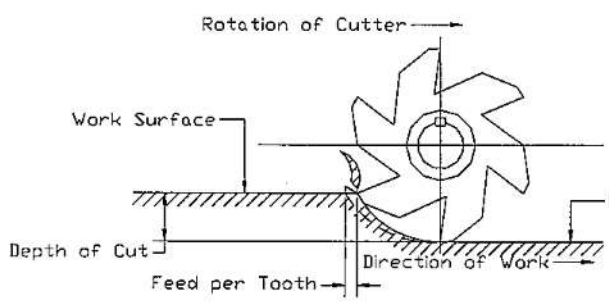

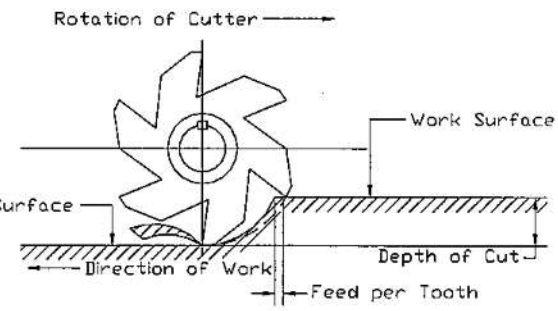

Tapping

Tapping is considered one of the most difficult metal removal operations regardless of the primary alloy. Beryllium copper can be tapped successfully if the following are taken under consideration: proper selection of the tapping machine, cutting fluid, tap configuration, and feed rates. When classifying beryllium copper for tapping, it should be grouped with the harder alloys rather than the softer brasses and bronzes. When tapping beryllium copper, it is usually done after heat treatment. The softer the alloy the easier it is tapped, and the standard ground taps can be used for most tapping operations. When tapping beryllium copper, it is suggested to use active cutting oil.

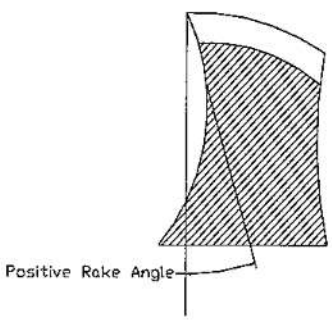

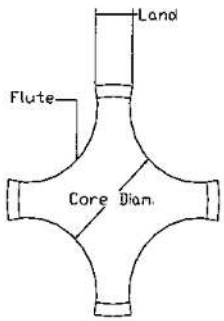

UNS Alloy No.	Berylco Alloy	Temper	Cutting Speed (ft/min)	Rake Angle
C17200 and C17300	25 and 33	A	50-100	5° - 7°
		H	30-60	5° - 7°
		AT, HT	10-30	5° - 7°
C17500 and C17510	10 and 14	A	20-150	5° - 7°
		H	10-60	5° - 7°
		AT, HT	10-100	5° - 7°
C82800, C82600, C82500, C82510, C82400	275C, 245C, 20C, 21C, 165C	C, A	20-50	5° - 7°
		CT, AT	5-10	5° - 7°
C82200, C82000	14C, 10C	C, A	10-75	5° - 7°
		CT, AT	10-50	5° - 7°

- When tapping holes smaller than 1/8 in. use the lower end of the cutting speed.
- 2-3-4 flutes are recommended.

Turning

If the cutting speeds and feeds are high, and the production quantities are large, then carbide tools have the best advantage. Beryllium copper is sheared easily and cutting tools should be ground with generous positive rake angles. It is important to note that when turning beryllium copper avoid a zero or negative rake angle and low feed rate (<0.005 inch/rev.). A low feed rate will work harden the beryllium copper. This results in excessive tool wear. If turning is preformed without coolant, the cutting speed should be reduced by 25%.

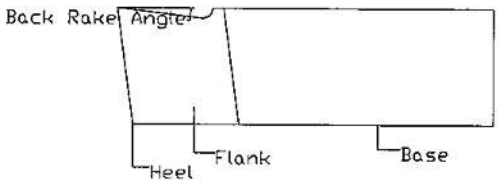

Material						
UNS Alloy No.	Berylco Alloy	Temper	Tool Material	Speed (SFM)	Feed (IPR)	Back Rake
Carbide Tools						
C17200 and C17300	25 and 33	A	C-2	1400-1800	0.010-0.020	0-10°
		H	C-2	1200-1500	0.010-0.020	0-10°
		AT, HT	C-2	900-1200	0.010-0.020	0-10°
C17500 and C17510	10 and 14	A, H AT, HT	C-2	1500-1800	0.010-0.025	0°
High Speed Steel Tools						
C17200 and C17300	25 and 33	A	T-1	400-600	0.010-0.020	0-20°
		H	T-1	200-400	0.010-0.020	0-10°
		AT, HT	T-1	200-300	0.010-0.020	0-10°
C17500 and C17300	10 and 14	A, H AT, HT	M-2	600-700	0.010-0.025	0°

Scrap

NGK Metals purchase beryllium copper scrap which is clean, dry and segregated by alloy. Contact NGK Metals Sales Office at 1-800-523-8268 for the policies and procedures

Health & Safety

NGK Metals has a written brochure called "Speaking Out: Health Hazard Information for Users of Beryllium Copper". This along with the Material Safety Data Sheet (MSDS) should be read before working with this material. This information is also available on the internet at www.ngkmetals.com under "Material Safety". For additional information contact NGK Metals at 1-800-523-8268.

Appendix

Classification of Tooling Materials

Code	Application	Characteristic
Carbide Grades		
C-1	Roughing	Medium-high shock resistance Medium-low wear resistance
C-2	General purpose	Medium shock resistance Medium wear resistance
C-3	Finishing	Medium-low shock resistance Medium-high wear resistance
C-4	Precision finishing	Low shock resistance High wear resistance
High Speed Steel (Molybdenum Types)		
M1	General purpose	Excellent resistance to cutting temp. Medium-low wear resistance
M2	General purpose	Excellent resistance to cutting temp. Medium wear resistance
High Speed Steel (Tungsten Types)		
T1	General purpose	Excellent resistance to cutting temp. Medium wear resistance
T2	General purpose	Excellent resistance to cutting temp. High strength tool